OPTOMA SET 4: MEDIUM PRO AV CEILING MOUNT

Product code: OPT.1040 | OCMPROM

SPECIFICATION SHEET

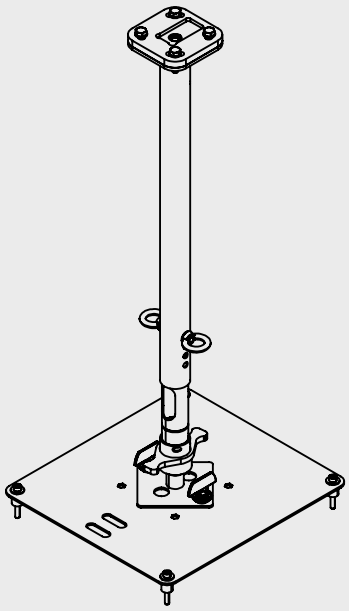

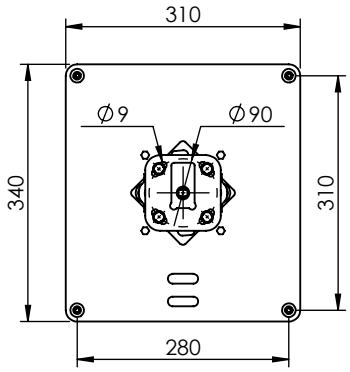

Max. load	30 KG
Net Weigth	6 KG
Gross weigth	8.5 KG

Dimensions	mm [inch]
Revision	
Sheet size	A4
Projection	

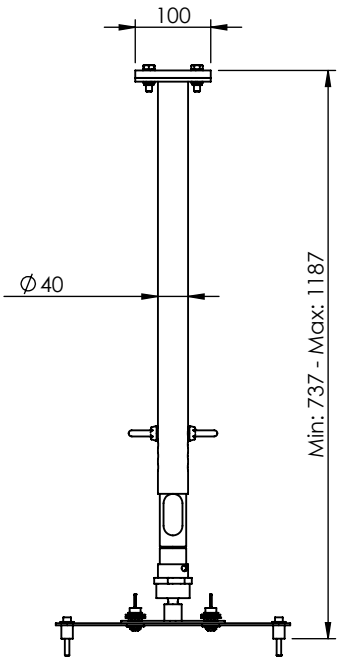

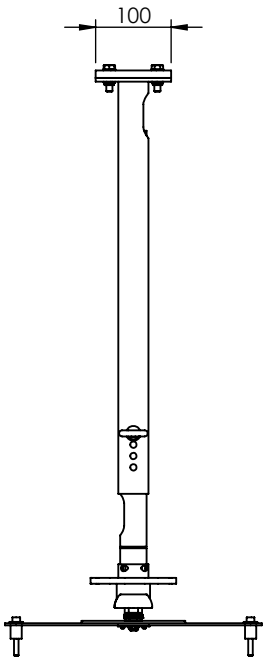

Note: This document and specifications herein are confidential and the exclusive property of SmartMetals Mounting Solutions B.V. Neither this design nor any information contained in this drawing may be reproduced or disclosed to others without written consent of SmartMetals Mounting Solutions B.V. The design and information will not be Reproduced, copied or used, either in part or in its entirety, as the basis for the manufacture or sale of items without written permission.

Warning: Please study all instructions and illustrations carefully before installation. Information in this document is subject to change without further notice.